# 14.3.10 Valve V212-31 (optional)

## Technical data:

Ambient temperature, 0 to +55°C

Valve
Material:
Housing, Spherodical cast iron, AL 111 0717-00
Lining, NBR (nitrile)
Throttle, aluminium bronze AL 111 5710-93
Spindle, stainless steel, AL 111 2349-99
PN 10/10K

Gearbox
Material:
Body, Cast iron (GG25 / ASTM A48-40)
Surface coating, Polyurethane
Sealings, NBR (nitrile)
Enclosure, IP 65
3/2 relief valve

Actuator
Material:
Housing, anodized aluminium
Shaft, forged carbon steel A 105, nickel plated
Sealing, NBR (nitrile)
Working pressure, 5,5 to 8 bar

Solenoid valve, (pilot valve and coil)
Material:
Housing, Aluminium.
Sealing, NBR (nitrile).
Function, 5/2 valve.
Media, air (dry or greased), neutral gases.
Mono stable, internal pilot aeration.
Flow, min 900 Nl/min (Valve DN/A 100-500).
Flow, min 3000 Nl/min (Valve DN/A 600).
Service pressure, 5,5-8 bar.
Insulation material, class F.
Voltage, 24 V DC.
Power consumption, max 3 W
Enclosure, IP65.

Switch box
Material:
Housing, aluminium.
Sealing, PUR
Contact data, max. 4 A, 230 V AC
Enclosure, IP65.

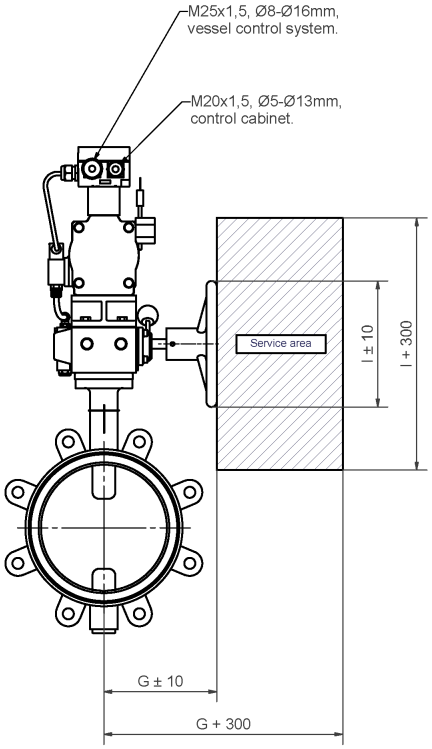


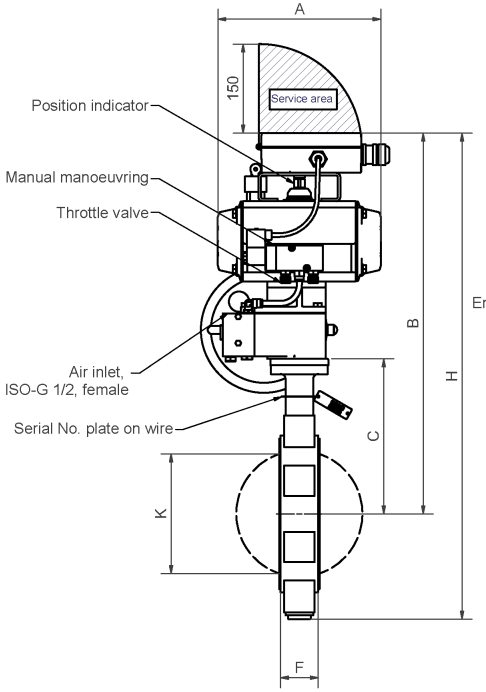


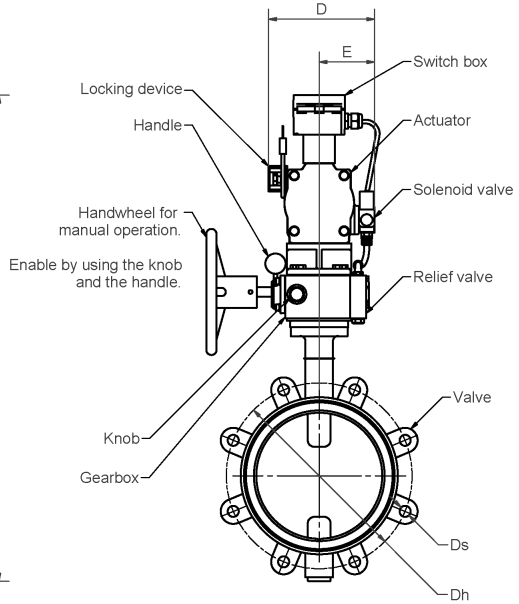


| Article No. | Name/Designation | A [Max.] | B [Max.] | C [Max.] | D [Max.] | E [Max.] | F | G | H [Max.] | K [Max.] | I | Dh | Ds | No. of holes | Weight [Max.] |
|---|---|---|---|---|---|---|---|---|---|---|---|---|---|---|---|
| 9007168 73/93 | Valve DN600 / A600 | 710 | 1172 | 510 | 385 | 178 | 154 | 335 | 1603 | 580 | 700 | 725 / 730 | M27 / M30 | 20 / 24 | 400 |
| 9007168 72 | Valve DN/A 500 | 550 | 1047 | 495 | 276 | 145 | 127 | 340 | 1426 | 480 | 600 | 620 | M24 | 20 | 227 |
| 9007168 71 | Valve DN/A 450 | 550 | 994 | 442 | 276 | 145 | 114 | 340 | 1329 | 432 | 600 | 565 | M24 | 20 | 194 |
| 9007168 70/90 | Valve DN400 / A400 | 488 | 916 | 407 | 224 | 137 | 102 | 305 | 1224 | 382 | 300 | 515 / 510 | M24 | 16 | 151 |
| 9007168 69/89 | Valve DN350 / A350 | 412 | 820 | 358 | 213 | 131 | 78 | 300 | 1108 | 327 | 250 | 460 / 445 | M20 / M22 | 16 | 97 |
| 9007168 68/88 | Valve DN300 / A300 | 412 | 764 | 302 | 213 | 131 | 78 | 300 | 996 | 293 | 250 | 400 | M20 / M22 | 12 / 16 | 84 |
| 9007168 67/87 | Valve DN250 / A250 | 337 | 696 | 273 | 183 | 110 | 68 | 270 | 900 | 242 | 200 | 350 / 355 | M20 / M22 | 12 | 62 |
| 9007168 66/86 | Valve DN200 / A200 | 266 | 611 | 246 | 161 | 102 | 60 | 235 | 778 | 191 | 200 | 295 / 290 | M20 | 8 / 12 | 43 |
| 9007168 65 | Valve DN/A 150 | 264 | 564 | 212 | 144 | 96 | 56 | 235 | 704 | 140 | 200 | 240 | M20 | 8 | 36 |
| 9007168 64/84 | Valve DN125 / A125 | 264 | 548 | 196 | 144 | 96 | 56 | 235 | 672 | 113 | 200 | 210 | M16 / M20 | 8 | 32 |
| 9007168 63/83 | Valve DN100 / A100 | 210 | 489 | 179 | 132 | 84 | 52 | 215 | 598 | 88 | 200 | 180 / 175 | M16 | 8 | 23 |

| Revision No. | Date | Revised | Approved |
|---|---|---|---|
| 6 | 2019-02-04 | OWT | AHN2 |

**V212-31**

| | | | |
|---|---|---|---|
| Title: Valve, dim. drw. | | | |
| NB Review Article Data report for additional demands | | | |
| First angle projection Method ISO E | Responsible Department: BALLAST | Date: 2013-04-02 | Sheet No. 1 / No. of sheets 1 / Revision No. 6 |
| | Creator: jron | Approved: tev | Document No. 9007176 |

A2

This document and its contents is owned by Alfa Laval AB (publ.) and protected by laws governing intellectual property and thereto related rights. Without limiting any rights related to this document, no part of this document may be copied, reproduced or transmitted in any form or by any means (electronic, mechanical, photocopying, recording or otherwise) or be disclosed to any third party without the consent of Alfa Laval. Alfa Laval will enforce its rights related to this document to the fullest extent of the law, including the seeking of criminal prosecution.

This document may constitute a contractual obligation on the part of Alfa Laval and only to the extent expressly agreed upon.